CW SPLIT EAR TRAINER

Original designed by AD7C and modified by PA1ALV

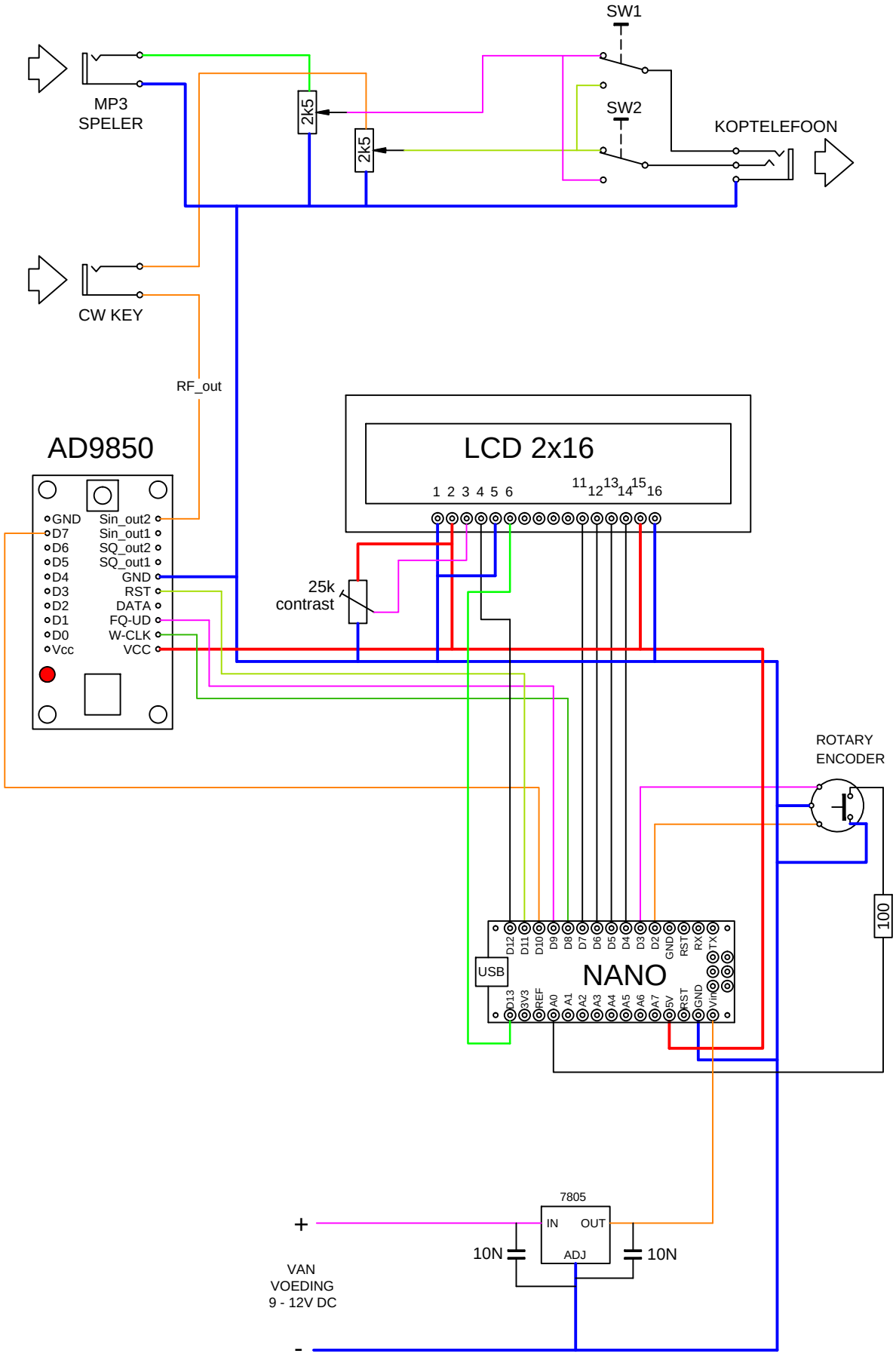

PA1ALV@2016

gewijzigd 13-02-2017